HOQUIAM WATERSHED BRIDGES

FISH BARRIER REPLACEMENT PROJECT

PROJECT CONTACT INFORMATION

OWNER

CITY OF HOQUIAM
609 8TH STREET, HOQUIAM, WA 98550

OWNER'S REPRESENTATIVE

LOREN HINER, CITY FORESTER
PHONE: (360) 249-5424 and (360) 581-1193
EMAIL: lhiner@montesano.us

PROJECT ENGINEER

KYLE FREEMAN, P.E.
BERGLUND, SCHMIDT & ASSOCIATES, INC.
2323 BAY AVENUE, HOQUIAM, WA 98550
PHONE: (360) 532-7630
EMAIL: kfreeman@berglundschmidt.com

PROJECT SCOPE

THE PROJECT INCLUDES, BUT IS NOT LIMITED TO, PROVIDING ALL MATERIALS, LABOR AND EQUIPMENT NECESSARY FOR THE REMOVAL OF TWO FISH-BARRIER CULVERTS AND REPLACEMENT WITH TWO FISH-PASSAGE STRUCTURES AS OUTLINED WITHIN THESE DRAWINGS AND THE ASSOCIATED TECHNICAL SPECIFICATIONS .

THE TWO SITES ARE LOCATED WITHIN THE CITY OF HOQUIAM WATERSHED AND ARE IDENTIFIED IN THE CITY'S FOREST MANAGEMENT (RMAP) PLAN AS CROSSINGS #12582 AND #12607. ACCESS TO THE WATERSHED MAINLINE AND THE SITES IS LOCATED OFF OF STATE HIGHWAY 101 AT MILEPOST 94.6.

SHEET INDEX

C-1: TITLE SHEET / VICINITY MAPS
C-2: CROSSING #12582 - PLAN VIEW
C-3: CROSSING #12582 - PROFILE VIEWS
C-4: CROSSING #12582 - BRIDGE SCHEMATICS
C-5: CROSSING #12582 - EROSION CONTROL & STREAM DIVERSION PLAN
C-6: CROSSING #12607 - PLAN VIEW
C-7: CROSSING #12607 - PROFILE VIEWS
C-8: CROSSING #12607 - BRIDGE SCHEMATICS
C-9: CROSSING #12607 - EROSION CONTROL & STREAM DIVERSION PLAN
C-10: DETAILS - ROAD & BRIDGE
C-11: DETAILS - EROSION CONTROL & NOTES

02/22/16
KYLE FREEMAN
STATE OF WASHINGTON
46358
REGISTERED
PROFESSIONAL ENGINEER

VICINITY MAP

SCALE: 1" = 5 miles

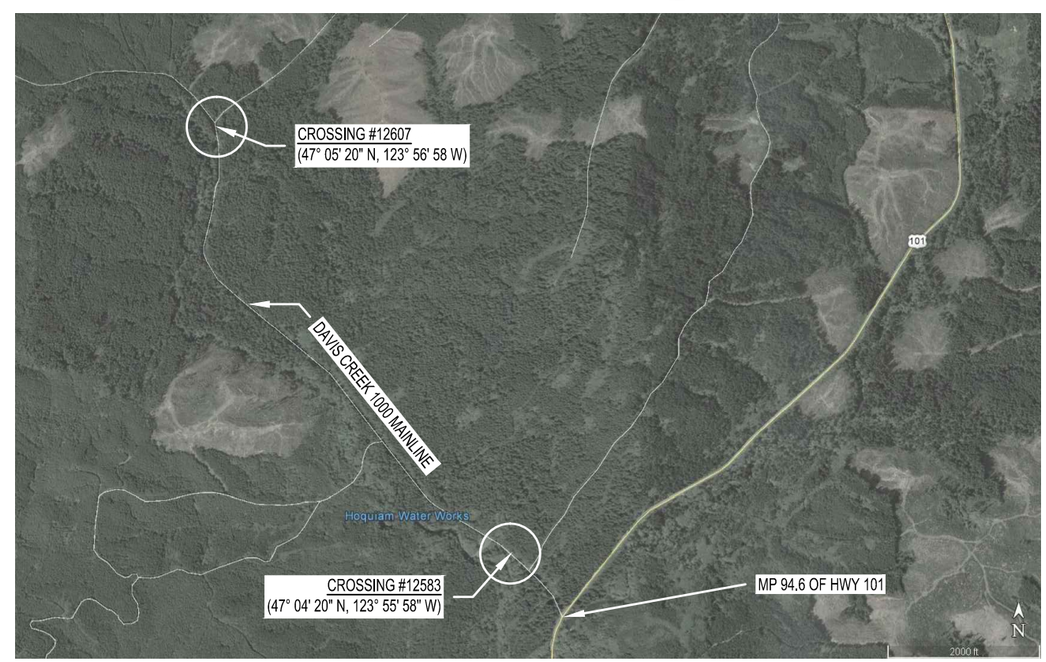

PROJECT SITE MAP

SCALE: 1" = 5 miles

REVISIONS	BY	DATE

TITLE SHEET / VICINITY MAPS

WATERSHED BRIDGES
CITY OF HOQUIAM
609 8TH STREET
HOQUIAM, WA 98550

BERGLUND, SCHMIDT & ASSOC., INC.
Professional Engineers and Land Surveyors
2323 Bay Avenue
Hoquiam, WA. 98550
TEL.: (360)532-7630
FAX: (360)532-9682

JOB # :15.019
DATE:2/22/16
SCALE:SHOWN
DESIGNED:KJF
DRAWN:KJF
CHECKED:KJF

C-1

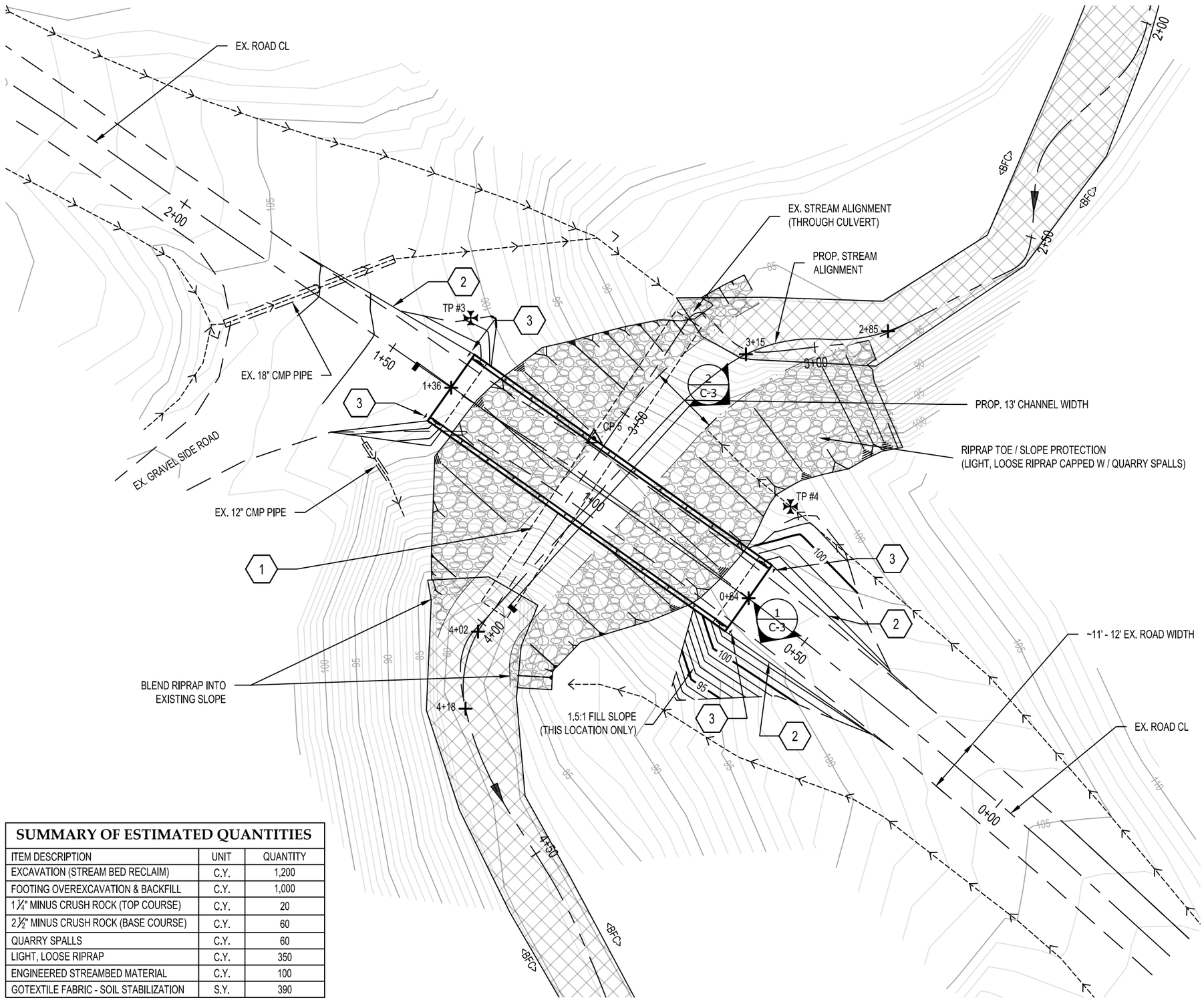

KEY NOTES

1. EXISTING 72" DIAM. x 70' CORRUGATED METAL PIPE CULVERT TO BE REMOVED.
2. FLARE ROAD EDGE TO 16' WIDTH USING 40' TRANSITION. PROVIDE SLOPE FILL AT 3:1, UNLESS OTHERWISE STATED.
3. OBJECT MARKER FABRICATION AND INSTALLATION SHALL BE IN ACCORDANCE WITH DETAILS OF THESE PLANS, AS WELL AS THE PROVISIONS OF THE MUTCD MANUAL, 2009 ED. WITH 2012 REVISIONS.

TYPE 3 OBJECT MARKERS

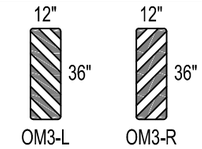

ALIGN MARKERS SUCH THAT THE INSIDE EDGE CLOSEST TO THE ROAD USER IS INSTALLED DIRECTLY IN LINE WITH THE INSIDE EDGE OF THE OBSTRUCTION (GUARDRAIL OR CURB)

CONTROL POINTS

NUM	X	Y	ELEV	DESCRIPTION
CP5	10000.000,	10000.000	100.00	HUB & TACK
CP6	9788.505,	10153.660	116.57	HUB & TACK (OFF PAGE)
CP7	10202.430,	9831.228	112.17	HUB & TACK (OFF PAGE)

DESIGN ELEVATIONS

NUM	X	Y	ELEV	DESCRIPTION
0+64	10030.536,	9968.376	103.00	ROAD CL - FG
1+36	9971.774,	9946.563	103.00	ROAD CL - FG
2+85	10000.000,	10000.000	83.00	STREAM CL - FG
3+15	10030.023,	10016.600	81.57	STREAM CL - FG
4+02	9977.079,	9961.789	80.47	STREAM CL - FG
4+18	9974.612,	9946.563	79.70	STREAM CL - FG

*COORDINATES AND ELEVATIONS ARE BASED OFF OF AN ASSUMED HORIZONTAL AND VERTICAL DATUM

LEGEND

- 100 — CONTOUR LINES (EX. ARE GRAYED)
- EX. DITCH FLOWLINE
- EX. STREAM THALWEG
- EX. ROAD EDGE OF GRAVEL
- <BFC> — PROP. ROAD FILL SLOPE CATCH / BANKFULL CHANNEL EXTENT
- CP1 — CONTROL POINT
- TP #1 — TEST PIT
- 1+00 — FINISHED GRADE (FG) POINT (AT ALIGN. STATION IDENTIFIED)
- X / X-X — VIEW NUMBER / SHEET NUMBER

SUMMARY OF ESTIMATED QUANTITIES

ITEM DESCRIPTION	UNIT	QUANTITY
EXCAVATION (STREAM BED RECLAIM)	C.Y.	1,200
FOOTING OVEREXCAVATION & BACKFILL	C.Y.	1,000
1 ¼" MINUS CRUSH ROCK (TOP COURSE)	C.Y.	20
2 ½" MINUS CRUSH ROCK (BASE COURSE)	C.Y.	60
QUARRY SPALLS	C.Y.	60
LIGHT, LOOSE RIPRAP	C.Y.	350
ENGINEERED STREAMBED MATERIAL	C.Y.	100
GOTEXTILE FABRIC - SOIL STABILIZATION	S.Y.	390

QUANTITIES LISTED IN THE ABOVE TABLE ARE APPROXIMATE ONLY AND ARE PROVIDED ONLY FOR THE CONTRACTOR'S CONVENIENCE. ADDITIONALLY, VALUES ARE IN-PLACE VALUES AND HAVE NOT HAD ANY SHRINK OR SWELL FACTORS APPLIED.

CROSSING #12582 - PLAN VIEW

SCALE: 1" = 20'

N

02/22/16
KYLE FREEMAN
STATE OF WASHINGTON
46358
REGISTERED
PROFESSIONAL ENGINEER

0 20' 40'

REVISIONS	BY	DATE

CROSSING #12582
PLAN VIEW

WATERSHED BRIDGES
CITY OF HOQUIAM
609 8TH STREET
HOQUIAM, WA 98550

BERGLUND, SCHMIDT & ASSOC., INC.
Professional Engineers and Land Surveyors
2323 Bay Avenue
Hoquiam, WA. 98550
TEL.: (360)532-7630
FAX: (360)532-9682

JOB # :15.019
DATE:2/22/16
SCALE:SHOWN
DESIGNED:KJF
DRAWN:KJF
CHECKED:KJF

C-2

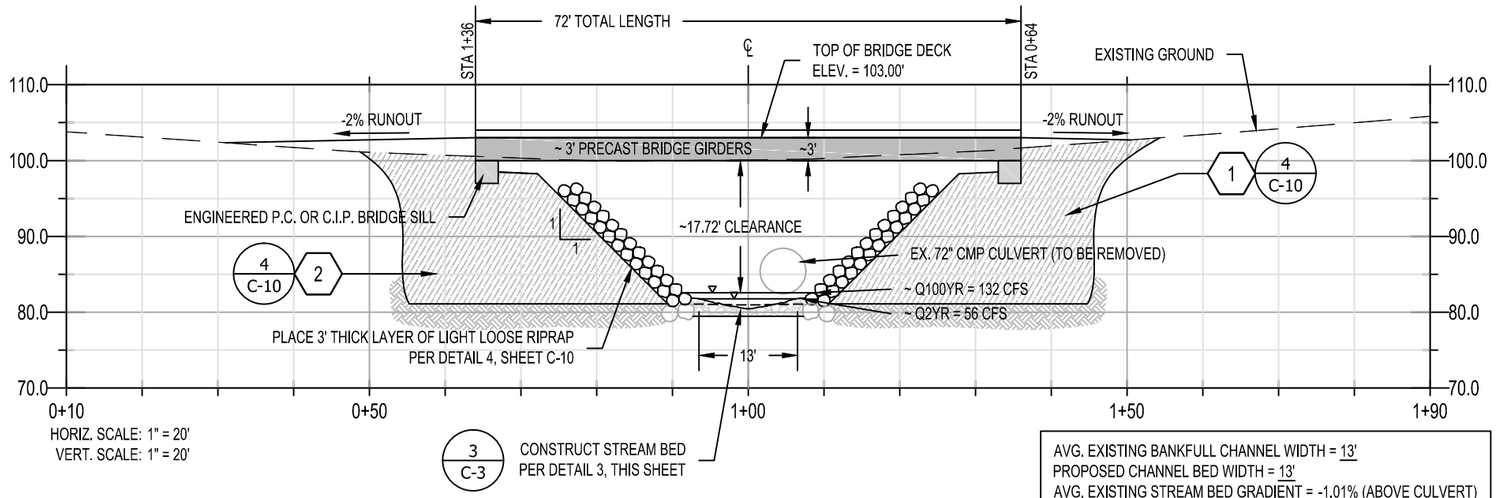

AVG. EXISTING BANKFULL CHANNEL WIDTH = 13'
PROPOSED CHANNEL BED WIDTH = 13'
AVG. EXISTING STREAM BED GRADIENT = -1.01% (ABOVE CULVERT)
-1.57% (BELOW CULVERT)
EXPECTED REGRADE / PROPOSED STREAM BED GRADIENT = -1.26%

1 ROAD CL PROFILE

SCALE: 1" = 20'

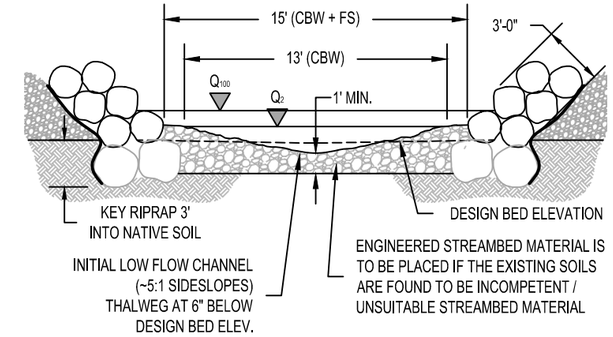

ENGINEERED STREAMBED MATERIAL

D100	D84	D50	D16	D5
6.90"	4.87"	3.45"	0.18"	0.02"

MIX DESIGN

2 PARTS 8" COBBLES - 1 PART 2½" STREAMBED SEDIMENT IN ACCORDANCE WITH SPECIFICATION 32 7300.

FILLER MATERIAL TO BE ¼" MINUS WITH AT LEAST 50% OF THE MATERIAL LESS THAN NO. 40 SIEVE SIZE.

3 STREAM CHANNEL

SCALE: N.T.S.

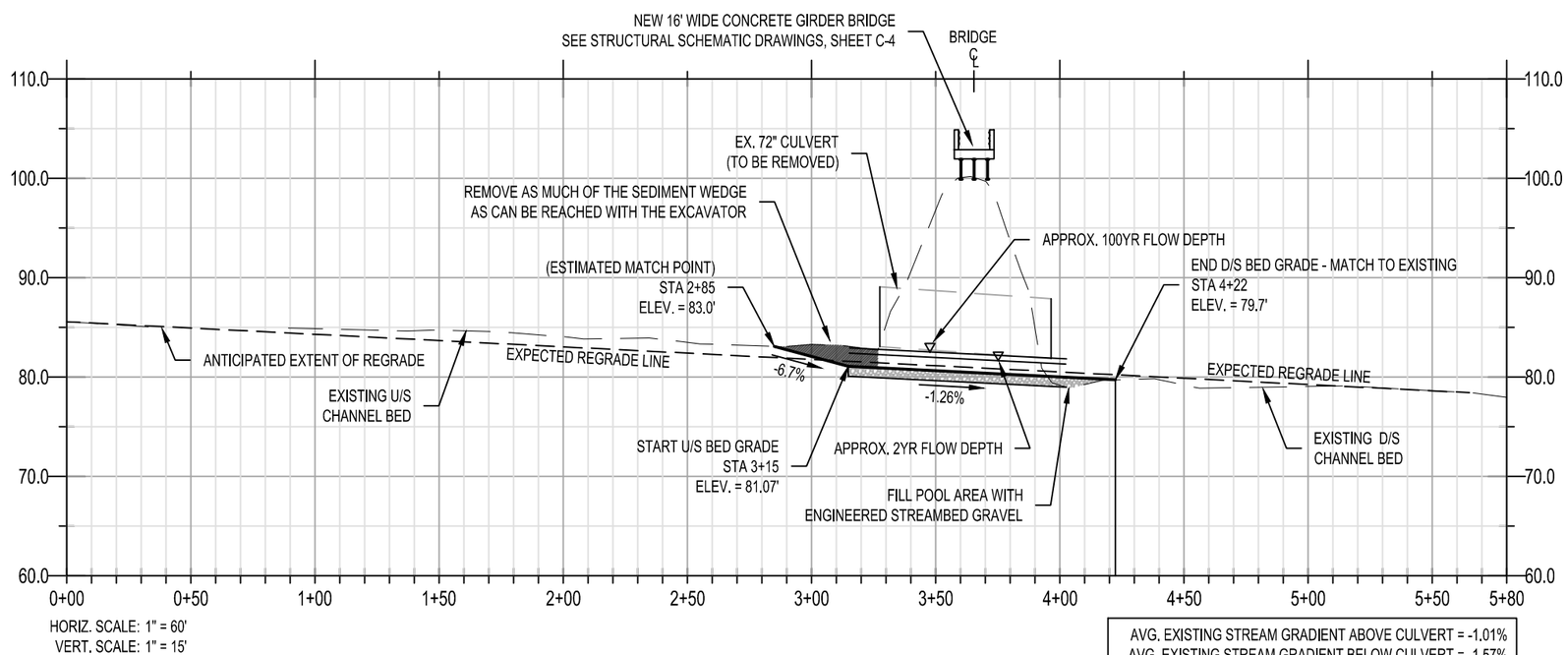

AVG. EXISTING STREAM GRADIENT ABOVE CULVERT = -1.01%
AVG. EXISTING STREAM GRADIENT BELOW CULVERT = -1.57%
EXPECTED REGRADE / PROPOSED STREAM GRADIENT = -1.26%

2 STREAM CL PROFILE

SCALE: 1" = 60'

KEY NOTES

1. SOILS FOUND AT TEST PIT #3 WERE FOUND TO BE UNSUITABLE FOR SUPPORT OF THE BRIDGE FOOTING. EXCAVATE ALL UNSUITABLE SOILS, AS NECESSARY, AND REPLACE WITH COMPACTED STRUCTURAL FILL TO THE EXTENTS AS FOLLOWS:
   MIN. WIDTH: 8'-0" BEYOND THE BACK EDGE OF THE FOOTING
   MAX. DEPTH: EQUAL TO THE STREAM BED ELEVATION (ELEV. = 81.0')

   SEE DETAIL 4, SHEET C-10 FOR EMBANKMENT AND BRIDGE FOOTING BACKFILL MATERIALS AND DEPTHS

2. SOILS FOUND AT TEST PIT #4 WERE SUITABLE FOR SUPPORT OF THE FOOTING BRIDGE. HOWEVER, A PORTION OF THE ROAD SLOPE MAY BE LOOSE FILL MATERIALS UNSUITABLE FOR SUPPORT OF THE BRIDGE FOOTING. EXCAVATE ALL UNSUITABLE SOILS, AS NECESSARY, AND REPLACE WITH MATERIALS IN ACCORDANCE WITH DETAIL 4, SHEET C-10.

LEGEND

- EX. GROUND GRADE
- STREAM REGRADE LINE
- STREAM BED DESIGN

02/22/16
KYLE FREEMAN
STATE OF WASHINGTON
46358
REGISTERED
PROFESSIONAL ENGINEER

REVISIONS	BY	DATE

CROSSING #12582
PROFILE VIEWS

WATERSHED BRIDGES
CITY OF HOQUIAM
609 8TH STREET
HOQUIAM, WA 98550

BERGLUND, SCHMIDT & ASSOC., INC.
Professional Engineers and Land Surveyors
2323 Bay Avenue
Hoquiam, WA. 98550
TEL.: (360)532-7630
FAX: (360)532-9682

JOB # :15.019
DATE:2/22/16
SCALE:SHOWN
DESIGNED:KJF
DRAWN:KJF
CHECKED:KJF

C-3

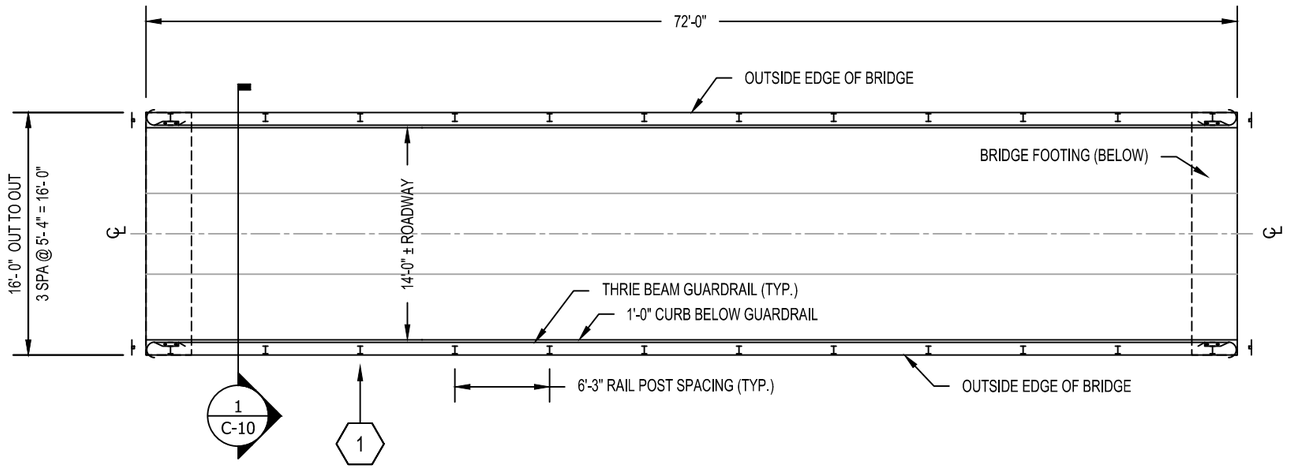

BRIDGE PLAN VIEW

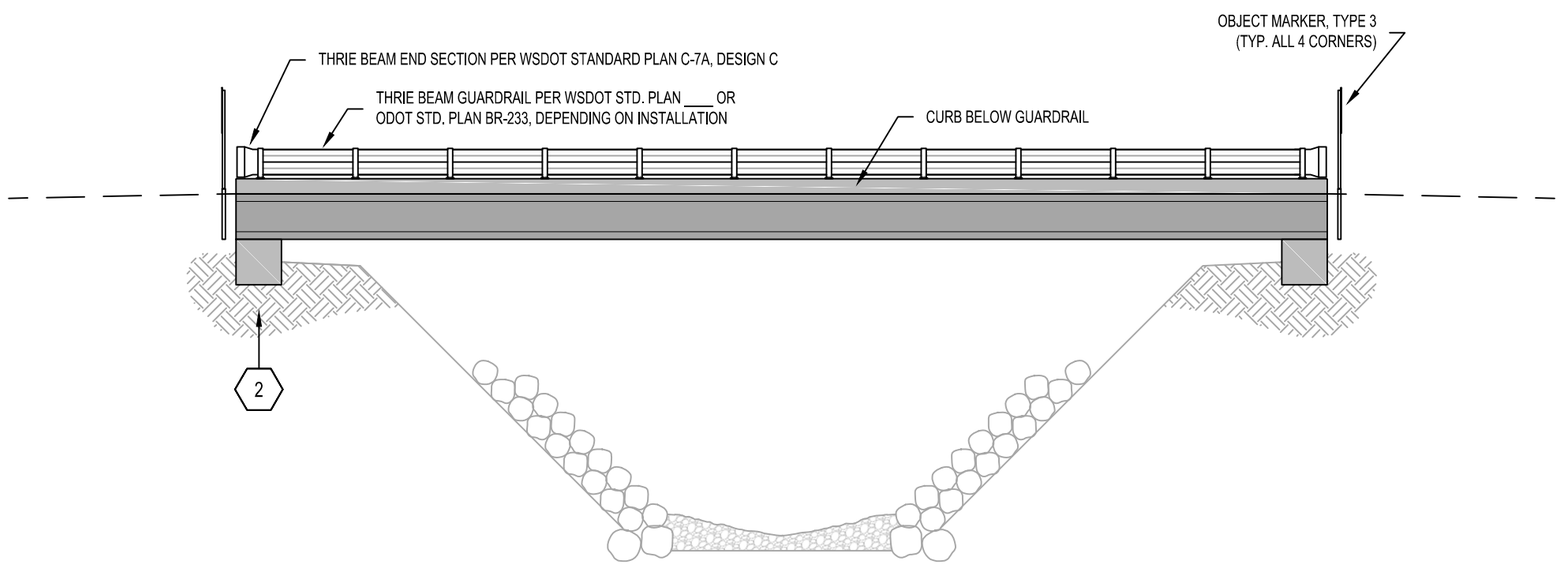

BRIDGE ELEVATION VIEW

CROSSING #12582: BRIDGE PLAN

SCALE: 1" = 10'

N

GENERAL NOTES

1. BRIDGE STRUCTURAL SCHEMATIC DRAWINGS, AS SHOWN ON THIS SHEET, ARE PROVIDED AS LAYOUT GUIDANCE TO THE BRIDGE COMPONENT MANUFACTURER
2. BRIDGE STRUCTURAL DESIGN AND SHOP DRAWINGS SHALL BE PROVIDED BY THE MANUFACTURER AND SHALL BEAR THE STAMP OF THE MANUFACTURER'S DESIGNING ENGINEER, LICENSED IN THE STATE OF WASHINGTON.

KEY NOTES

1. RAIL POSTS MAY BE DESIGNED TO BE INSTALLED EITHER ON TOP OF THE CURB OR ATTACHED TO THE SIDE OF THE GIRDERS AT THE OPTION OF THE DESIGNER. POSTS ATTACHED TO THE SIDE SHALL HAVE THE REQUIRED SPACER BLOCK TO PROJECT THE THRIE BEAM OUT TO THE INSIDE FACE OF THE CURB.
2. A SOIL BEARING CAPACITY OF 2,500 PSI MAY BE ASSUMED BY THE BRIDGE ENGINEER FOR DESIGN OF THE FOOTINGS.

PRECAST PRESTRESSED GIRDER DESIGN LOADING:

HL-93

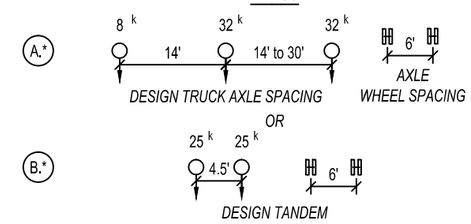

** PLUS A LONGITUDINAL DESIGN LANE LOAD OF 0.6 KLF UNIFORMLY DISTRIBUTED*

& OVERLOAD U-80

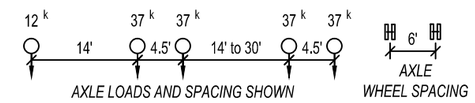

LEGEND

X — VIEW NUMBER
X-X — SHEET NUMBER

02/22/16

KYLE FREEMAN
STATE OF WASHINGTON
46358
REGISTERED
PROFESSIONAL ENGINEER

0 10' 20'

REVISIONS	BY	DATE

CROSSING #12582

BRIDGE SCHEMATICS

WATERSHED BRIDGES
CITY OF HOQUIAM
609 8TH STREET
HOQUIAM, WA 98550

BERGLUND, SCHMIDT & ASSOC., INC.
Professional Engineers and Land Surveyors
2323 Bay Avenue
Hoquiam, WA. 98550
TEL.: (360)532-7630
FAX: (360)532-9682

JOB # :15.019
DATE:2/22/16
SCALE:SHOWN
DESIGNED:KJF
DRAWN:KJF
CHECKED:KJF

C-4

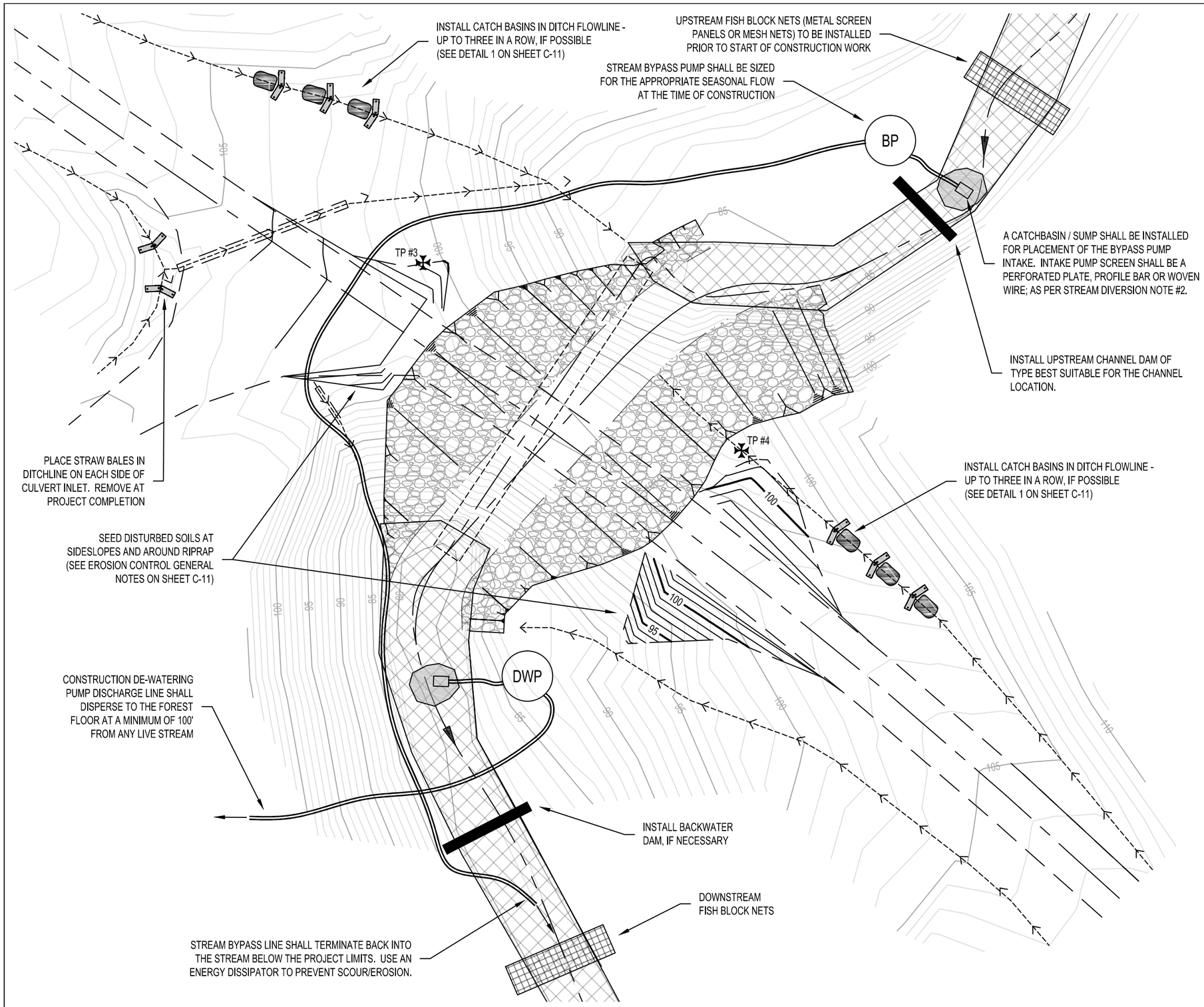

EROSION CONTROL & STREAM DIVERSION PLAN

SCALE: 1" = 20'

EROSION CONTROL NOTES:

1. PRIOR TO ANY DISTURBANCE ACTIVITIES, INSTALL TEMPORARY EROSION CONTROL MEASURES (SUCH AS FILTER FABRIC FENCE OR STRAW WATTLES) AS NECESSARY TO PREVENT SEDIMENTATION TO THE STREAM.
2. DISPOSE OF ALL PROJECT WASTE MATERIALS SUCH AS CONSTRUCTION DEBRIS, SILT, EXCESS DIRT OR OVERBURDEN IN AN APPROVED UPLAND DISPOSAL SITE.
3. DO NOT ALLOW UNCURED CONCRETE OR CONCRETE BY-PRODUCTS TO ENTER THE STREAM AT ANY TIME DURING CONSTRUCTION.
4. STOP WORK IF HIGH FLOW CONDITIONS ARE ENCOUNTERED DURING THE PROJECT THAT MAY CAUSE SILTATION OR IF THE COFFERDAMS BECOME COMPROMISED. DO NOT RESTART WORK UNTIL THE FLOW SUBSIDES.
5. PLACE ALL CLEARING DEBRIS ON THE DOWNHILL SIDE OF THE ROAD AT THE TOE OF THE ROAD FILL.

STREAM DIVERSION NOTES:

1. FISH CAPTURE / RELOCATION USING A COMBINATION OF REMOVAL METHODS INCLUDING DIP NETS, SEINES AND/OR ELECTROFISHING SHALL BE CONDUCTED PRIOR TO START OF ANY STREAM BYPASS AND/OR CONSTRUCTION ACTIVITY
2. EQUIPMENT PUMPS USED FOR STREAM BYPASS PUMPING SHALL BE FITTED WITH FISH EXCLUSION SCREENS PURSUANT TO RCW 77.57.010 AND RCW 77.57.070 IN ACCORDANCE WITH THE FOLLOWING REQUIREMENTS:
   - 2.1. THE PUMP INTAKE MUST BE SCREENED BY ONE OF THE FOLLOWING:
     - 2.1.1. PERFORATED PLATE: 0.094 inch (MAX. OPENING DIAM.)
     - 2.1.2. PROFILE BAR: 0.069 inch (MAX. WIDTH OPENING)
     - 2.1.3. WOVEN WIRE: 0.087 inch (MAX. OPENING IN THE NARROW DIRECTION)
   - 2.2. THE OPEN AREA FOR ALL TYPES OF FISH GUARDS SHALL BE MAINTAINED AT A MINIMUM OF 27%.
   - 2.3. THE SCREENED FACILITY SHALL HAVE ENOUGH SURFACE AREA TO ENSURE THAT THE VELOCITY THROUGH THE SCREEN IS LESS THAN 0.4 FEET PER SECOND AT ALL TIMES.
   - 2.4. THE PUMP SCREEN SHALL BE IN PLACE WHENEVER WATER IS WITHDRAWN FROM THE STREAM THROUGH THE PUMP INTAKE AND MAINTAINED TO PREVENT INJURY OR ENTRAPMENT TO JUVENILE FISH.
3. EXTRA SUPPLIES SHALL BE KEPT ON HAND TO MAINTAIN CONSTANT WORKING ORDER OF THE BYPASS SYTEM.
4. A BACKUP PUMP SHALL BE ONSITE, OR READILY AVAILABLE IN THE EVENT OF PRIMARY PUMP FAILURE.

LEGEND

- 100 — CONTOUR LINES (EX. ARE GRAYED)
- EX. DITCH FLOWLINE
- EX. STREAM THALWEG
- EX. ROAD EDGE OF GRAVEL
- <BFC> — BANKFULL CHANNEL EXTENT
- BP — BYPASS PUMP
- DWP — CONSTRUCTION DEWATERING PUMP

02/22/16
KYLE FREEMAN
STATE OF WASHINGTON
46358
REGISTERED
PROFESSIONAL ENGINEER

0 20' 40'

REVISIONS	BY	DATE

CROSSING #12582

TESC & DIVERSION PLAN

WATERSHED BRIDGES
CITY OF HOQUIAM
609 8TH STREET
HOQUIAM, WA 98550

BERGLUND, SCHMIDT & ASSOC., INC.
Professional Engineers and Land Surveyors
2323 Bay Avenue
Hoquiam, WA. 98550
TEL.: (360)532-7630
FAX: (360)532-9682

JOB # :15.019
DATE:2/22/16
SCALE:SHOWN
DESIGNED:KJF
DRAWN:KJF
CHECKED:KJF

C-5

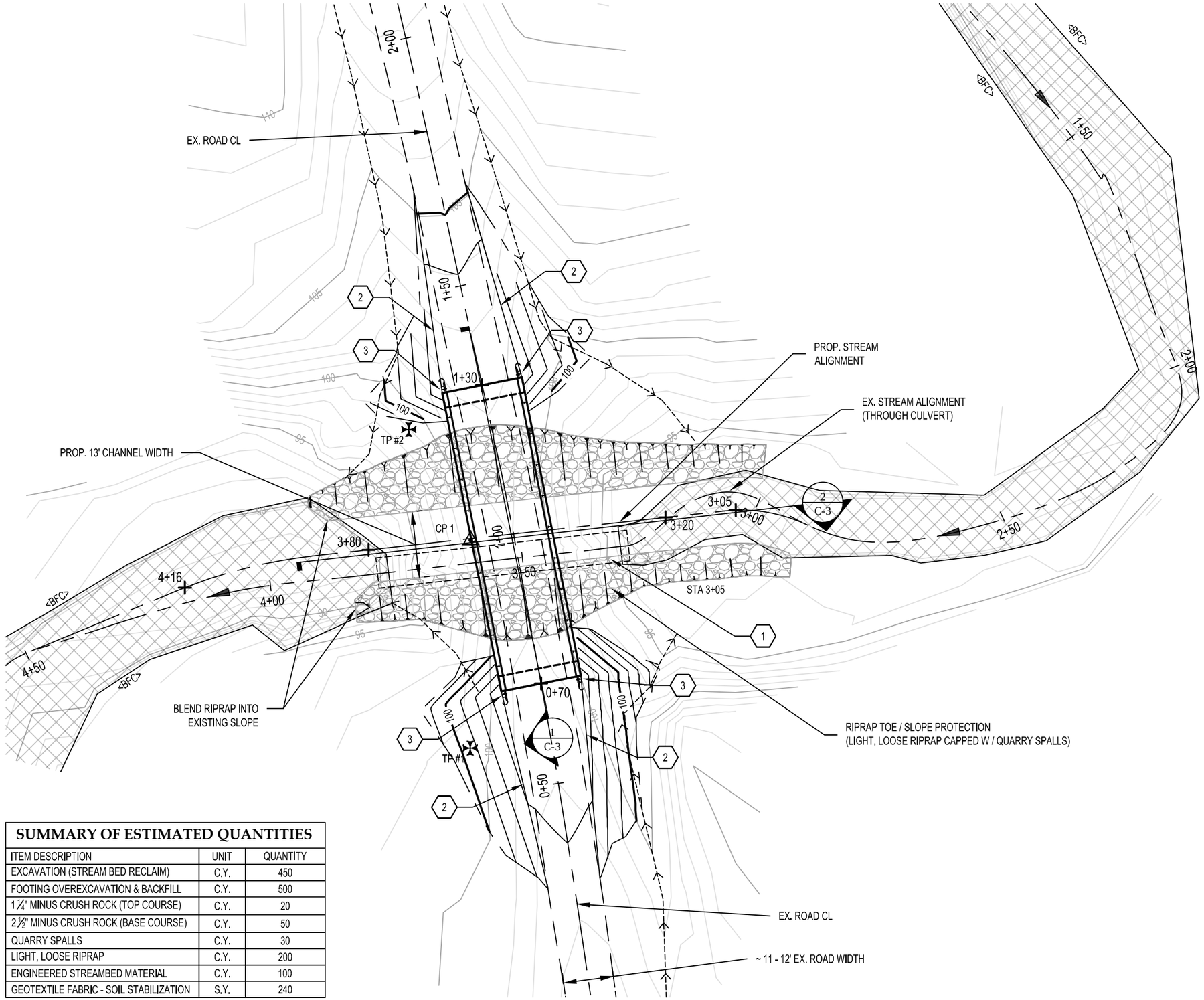

KEY NOTES

1. EXISTING 72" DIAM. x 50' CORRUGATED METAL PIPE CULVERT TO BE REMOVED.
2. FLARE ROAD EDGE TO 16' WIDTH USING 40' TRANSITION. PROVIDE SLOPE FILL AT 3:1, UNLESS OTHERWISE STATED.
3. OBJECT MARKER FABRICATION AND INSTALLATION SHALL BE IN ACCORDANCE WITH DETAILS OF THESE PLANS, AS WELL AS THE PROVISIONS OF THE MUTCD MANUAL, 2009 ED. WITH 2012 REVISIONS.

TYPE 3 OBJECT MARKERS

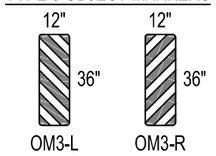

ALIGN MARKERS SUCH THAT THE INSIDE EDGE CLOSEST TO THE ROAD USER IS INSTALLED DIRECTLY IN LINE WITH THE INSIDE EDGE OF THE OBSTRUCTION (GUARDRAIL OR CURB)

CONTROL POINTS

NUM	X	Y	ELEV	DESCRIPTION
CP1	50000.000,	50000.000	100.00	HUB & TACK
CP2	50046.869,	49758.881	108.84	HUB & TACK (OFF PAGE)
CP3	49944.713,	50285.916	112.76	HUB & TACK (OFF PAGE)

DESIGN ELEVATIONS

NUM	X	Y	ELEV	DESCRIPTION
0+70	50013.853,	49971.737	104.00	ROAD CL - FG
1+30	50002.216,	50030.597	104.00	ROAD CL - FG
3+05	50052.219,	50005.928	90.50	STREAM CL - FG
3+20	50038.406,	50004.497	89.75	STREAM CL - FG
3+80	49979.826,	49998.120	89.05	STREAM CL - FG
4+16	49943.602,	49990.650	87.25	STREAM CL - FG

*COORDINATES AND ELEVATIONS ARE BASED OFF OF AN ASSUMED HORIZONTAL AND VERTICAL DATUM

LEGEND

- 100 — CONTOUR LINES (EX. ARE GRAYED)
- EX. DITCH FLOWLINE
- EX. STREAM THALWEG
- EX. ROAD EDGE OF GRAVEL
- PROP. ROAD FILL SLOPE CATCH
- <BFC> — BANKFULL CHANNEL EXTENT
- CP1 — CONTROL POINT
- TP #1 — TEST PIT
- 1+00 — FINISHED GRADE (FG) POINT (AT ALIGN. STATION IDENTIFIED)
- X / X-X — VIEW NUMBER / SHEET NUMBER

SUMMARY OF ESTIMATED QUANTITIES

ITEM DESCRIPTION	UNIT	QUANTITY
EXCAVATION (STREAM BED RECLAIM)	C.Y.	450
FOOTING OVEREXCAVATION & BACKFILL	C.Y.	500
1 ¼" MINUS CRUSH ROCK (TOP COURSE)	C.Y.	20
2 ½" MINUS CRUSH ROCK (BASE COURSE)	C.Y.	50
QUARRY SPALLS	C.Y.	30
LIGHT, LOOSE RIPRAP	C.Y.	200
ENGINEERED STREAMBED MATERIAL	C.Y.	100
GEOTEXTILE FABRIC - SOIL STABILIZATION	S.Y.	240

QUANTITIES LISTED IN THE ABOVE TABLE ARE APPROXIMATE ONLY AND ARE PROVIDED ONLY FOR THE CONTRACTOR'S CONVENIENCE. ADDITIONALLY, VALUES ARE IN-PLACE VALUES AND HAVE NOT HAD ANY SHRINK OR SWELL FACTORS APPLIED.

CROSSING #12607 - PLAN VIEW

SCALE: 1" = 20'

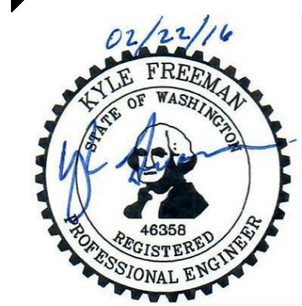

0 20' 40'

REVISIONS	BY	DATE

CROSSING #12607

PLAN VIEW

WATERSHED BRIDGES
CITY OF HOQUIAM
609 8TH STREET
HOQUIAM, WA 98550

BERGLUND, SCHMIDT & ASSOC., INC.
Professional Engineers and Land Surveyors
2323 Bay Avenue
Hoquiam, WA. 98550
TEL.: (360)532-7630
FAX: (360)532-9682

JOB # :15.019
DATE:2/22/16
SCALE:SHOWN
DESIGNED:KJF
DRAWN:KJF
CHECKED:KJF

C-6

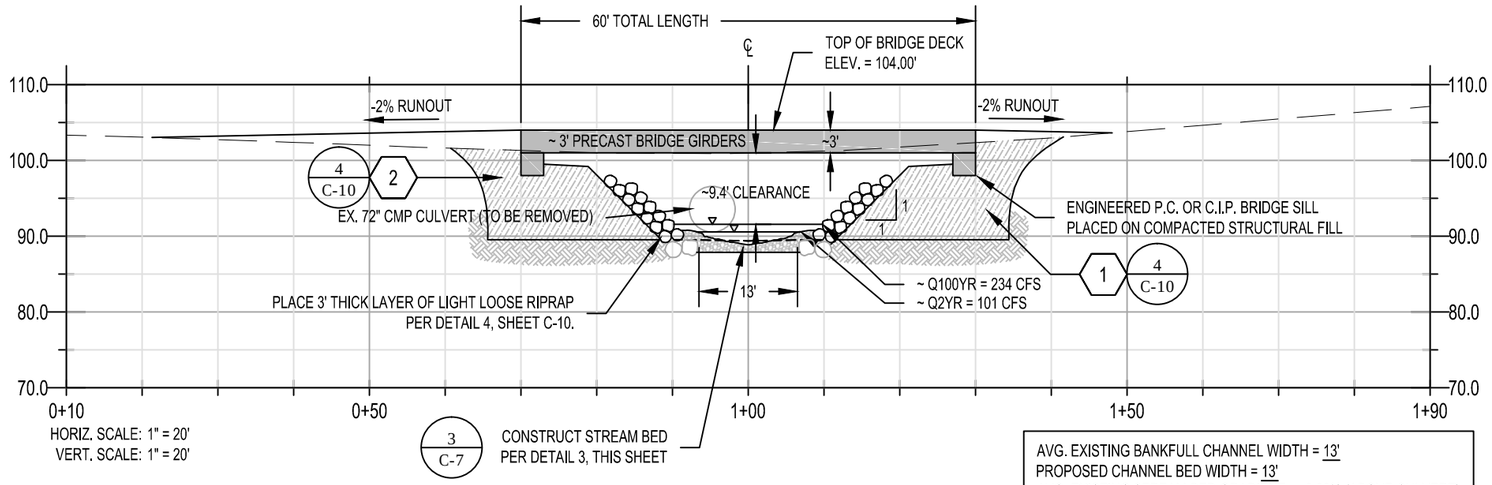

AVG. EXISTING BANKFULL CHANNEL WIDTH = 13'
PROPOSED CHANNEL BED WIDTH = 13'
AVG. EXISTING STREAM BED GRADIENT = -0.88% (ABOVE CULVERT)
-0.14% (BELOW CULVERT)
EXPECTED REGRADE / PROPOSED STREAM BED GRADIENT = -1.17%

0 20' 40'

1 ROAD CL PROFILE

SCALE: 1" = 20'

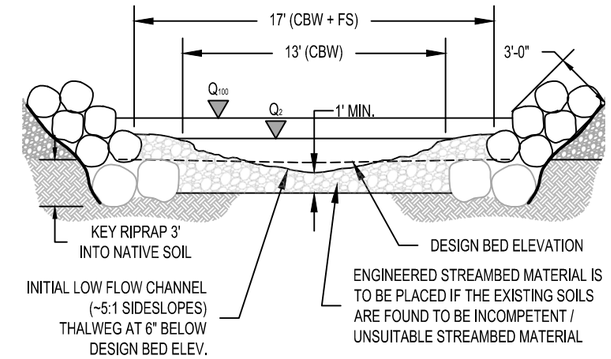

ENGINEERED STREAMBED MATERIAL

D100	D84	D50	D16	D5
8.82"	6.22"	4.41"	0.23"	0.02"

MIX DESIGN

2 PARTS 10" COBBLES - 1 PART 2½" STREAMBED SEDIMENT IN ACCORDANCE WITH SPECIFICATION 32 7300.

FILLER MATERIAL TO BE ¼" MINUS WITH AT LEAST 50% OF THE MATERIAL LESS THAN NO. 40 SIEVE SIZE.

3 STREAM CHANNEL

SCALE: N.T.S.

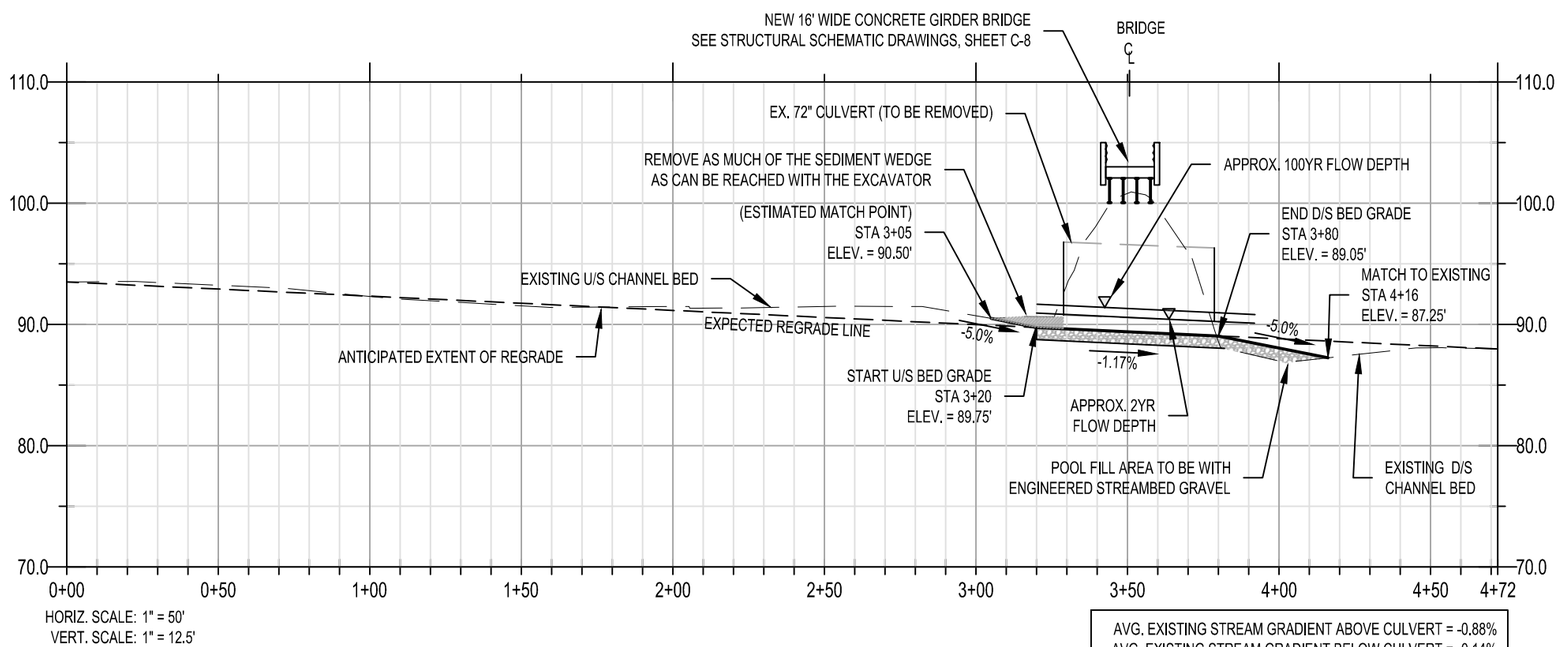

AVG. EXISTING STREAM GRADIENT ABOVE CULVERT = -0.88%
AVG. EXISTING STREAM GRADIENT BELOW CULVERT = -0.14%
EXPECTED REGRADE / PROPOSED STREAM GRADIENT = -1.17%

0 50' 100'

2 STREAM CL PROFILE

SCALE: 1" = 50'

KEY NOTES

1. SOILS FOUND AT TEST PIT #1 WERE FOUND TO BE UNSUITABLE FOR SUPPORT OF THE BRIDGE FOOTING. EXCAVATE ALL UNSUITABLE SOILS, AS NECESSARY, AND REPLACE WITH COMPACTED STRUCTURAL FILL TO THE EXTENTS AS FOLLOWS:
   MIN. WIDTH: 4'-0" BEYOND THE BACK EDGE OF THE FOOTING
   MAX. DEPTH: EQUAL TO THE STREAM BED ELEVATION (ELEV. = 90.0')

SEE DETAIL 4, SHEET C-10 FOR EMBANKMENT AND BRIDGE FOOTING BACKFILL MATERIALS AND DEPTHS

2. SOILS FOUND AT TEST PIT #2 WERE FOUND TO BE UNSUITABLE FOR SUPPORT OF THE BRIDGE FOOTING. EXCAVATE ALL UNSUITABLE SOILS, AS NECESSARY, AND REPLACE WITH COMPACTED STRUCTURAL FILL TO THE SAME MAX. EXTENTS AS DETAILED IN KEY NOTE #1.

LEGEND

- EX. GROUND GRADE
- STREAM REGRADE LINE
- STREAM BED DESIGN

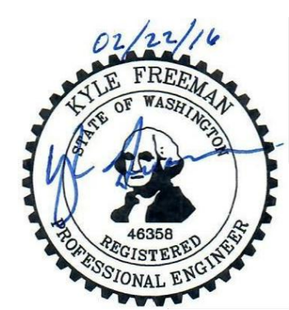

REVISIONS	BY	DATE

CROSSING #12607

PROFILE VIEWS

WATERSHED BRIDGES
CITY OF HOQUIAM
609 8TH STREET
HOQUIAM, WA 98550

BERGLUND, SCHMIDT & ASSOC., INC.
Professional Engineers and Land Surveyors
2323 Bay Avenue
Hoquiam, WA. 98550
TEL.: (360)532-7630
FAX: (360)532-9682

JOB # :15.019
DATE:2/22/16
SCALE:SHOWN
DESIGNED:KJF
DRAWN:KJF
CHECKED:KJF

C-7

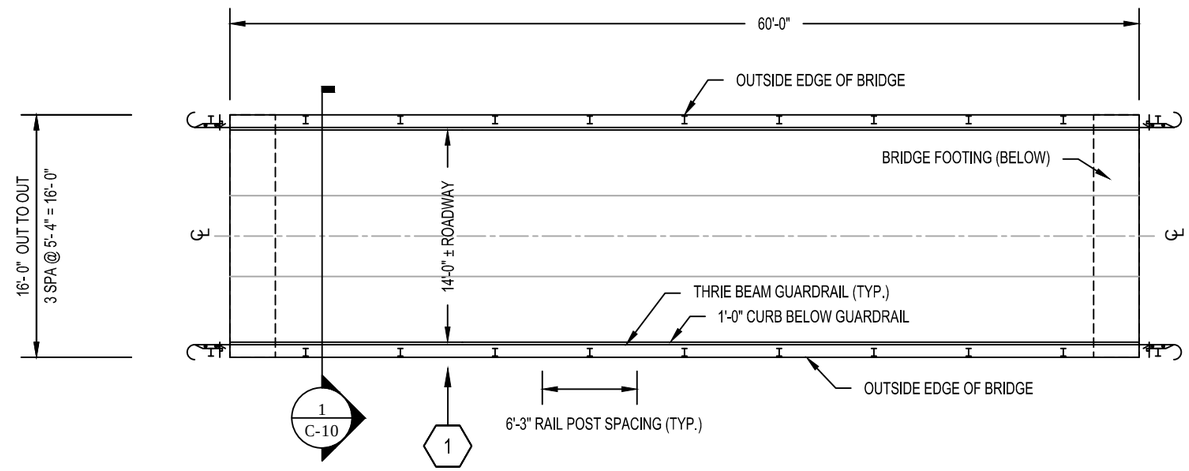

BRIDGE PLAN VIEW

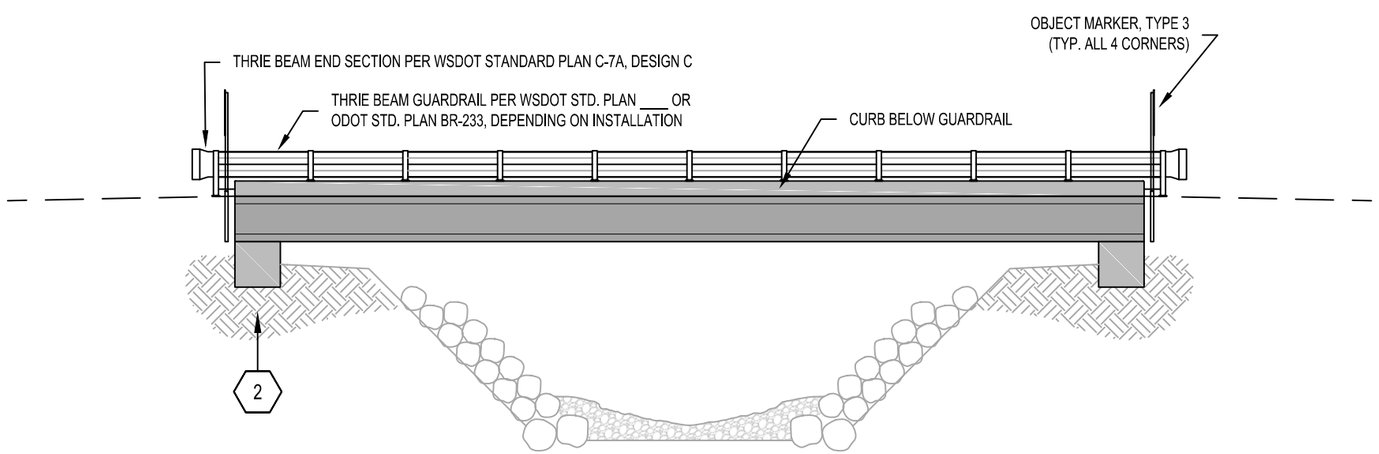

BRIDGE ELEVATION VIEW

CROSSING #12607: BRIDGE PLAN

SCALE: 1" = 10'

GENERAL NOTES

1. BRIDGE STRUCTURAL SCHEMATIC DRAWINGS, AS SHOWN ON THIS SHEET, ARE PROVIDED AS LAYOUT GUIDANCE TO THE BRIDGE COMPONENT MANUFACTURER
2. BRIDGE STRUCTURAL DESIGN AND SHOP DRAWINGS SHALL BE PROVIDED BY THE MANUFACTURER AND SHALL BEAR THE STAMP OF THE MANUFACTURER'S DESIGNING ENGINEER, LICENSED IN THE STATE OF WASHINGTON.

KEY NOTES

1. RAIL POSTS MAY BE DESIGNED TO BE INSTALLED EITHER ON TOP OF THE CURB OR ATTACHED TO THE SIDE OF THE GIRDERS AT THE OPTION OF THE DESIGNER. POSTS ATTACHED TO THE SIDE SHALL HAVE THE REQUIRED SPACER BLOCK TO PROJECT THE THRIE BEAM OUT TO THE INSIDE FACE OF THE CURB.
2. A SOIL BEARING CAPACITY OF 2,500 PSI MAY BE ASSUMED BY THE BRIDGE ENGINEER FOR DESIGN OF THE FOOTINGS.

PRECAST PRESTRESSED GIRDER DESIGN LOADING:

HL-93

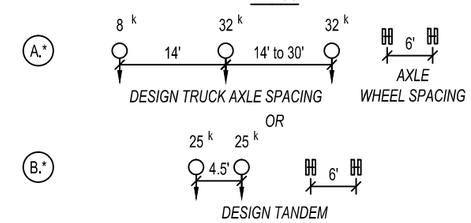

** PLUS A LONGITUDINAL DESIGN LANE LOAD OF 0.6 KLF UNIFORMLY DISTRIBUTED*

& OVERLOAD U-80

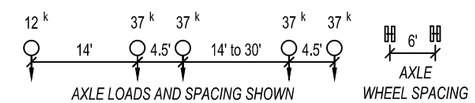

LEGEND

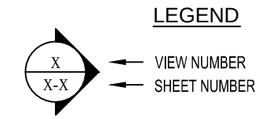

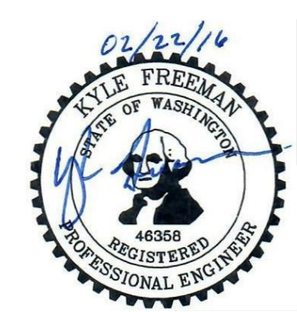

0 10' 20'

REVISIONS	BY	DATE

CROSSING #12607

BRIDGE SCHEMATICS

WATERSHED BRIDGES
CITY OF HOQUIAM
609 8TH STREET
HOQUIAM, WA 98550

BERGLUND, SCHMIDT & ASSOC., INC.
Professional Engineers and Land Surveyors
2323 Bay Avenue
Hoquiam, WA. 98550
TEL: (360)532-7630
FAX: (360)532-9682

JOB # :15.019
DATE:2/22/16
SCALE:SHOWN
DESIGNED:KJF
DRAWN:KJF
CHECKED:KJF

C-8

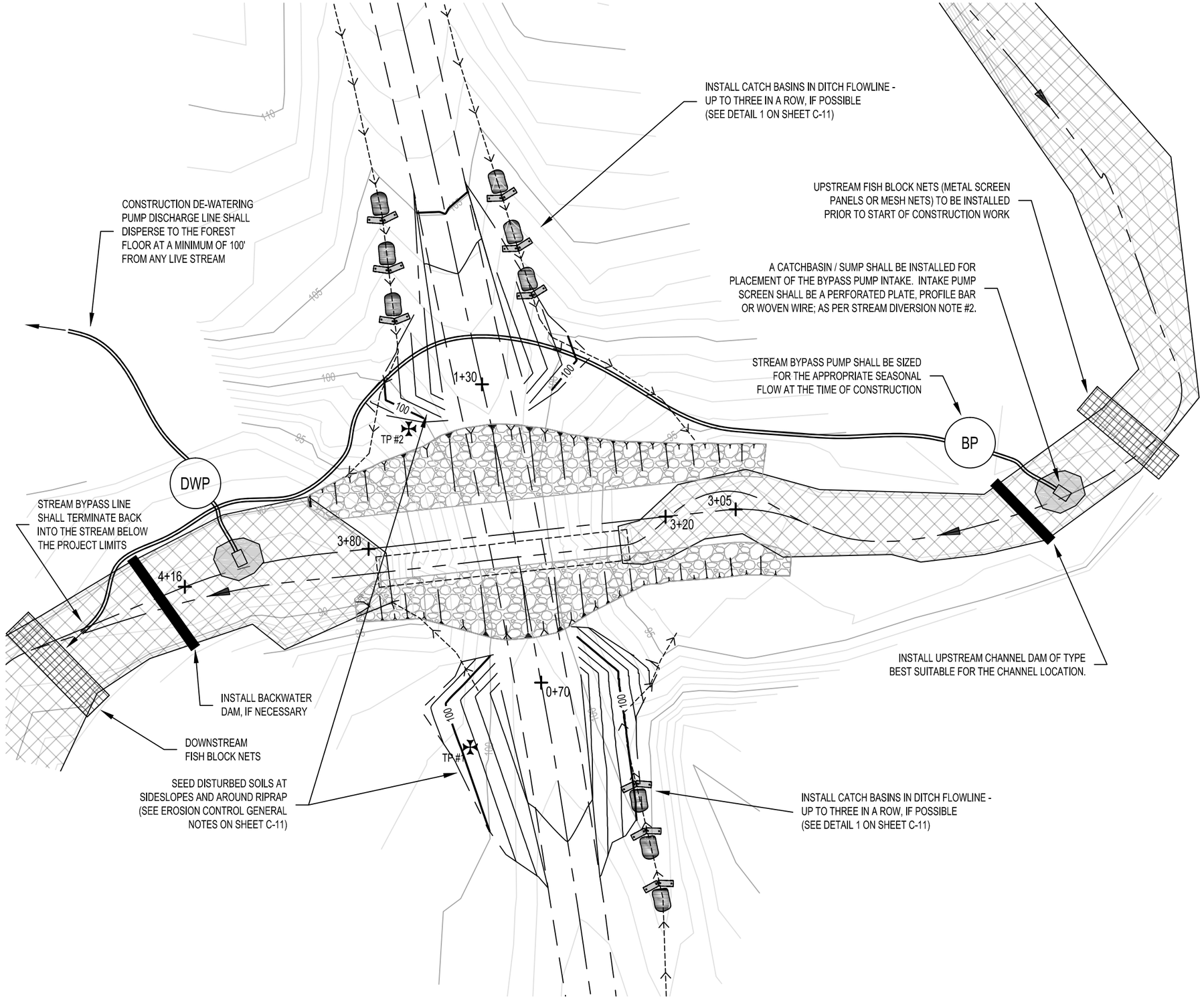

EROSION CONTROL & STREAM DIVERSION PLAN

SCALE: 1" = 20'

N

EROSION CONTROL NOTES:

1. PRIOR TO ANY DISTURBANCE ACTIVITIES, INSTALL TEMPORARY EROSION CONTROL MEASURES (SUCH AS FILTER FABRIC FENCE OR STRAW WATTLES) AS NECESSARY TO PREVENT SEDIMENTATION TO THE STREAM.
2. DISPOSE OF ALL PROJECT WASTE MATERIALS SUCH AS CONSTRUCTION DEBRIS, SILT, EXCESS DIRT OR OVERBURDEN IN AN APPROVED UPLAND DISPOSAL SITE.
3. DO NOT ALLOW UNCURED CONCRETE OR CONCRETE BY-PRODUCTS TO ENTER THE STREAM AT ANY TIME DURING CONSTRUCTION.
4. STOP WORK IF HIGH FLOW CONDITIONS ARE ENCOUNTERED DURING THE PROJECT THAT MAY CAUSE SILTATION OR IF THE COFFERDAMS BECOME COMPROMISED. DO NOT RESTART WORK UNTIL THE FLOW SUBSIDES.
5. PLACE ALL CLEARING DEBRIS ON THE DOWNHILL SIDE OF THE ROAD AT THE TOE OF THE ROAD FILL.

STREAM DIVERSION NOTES:

1. FISH CAPTURE / RELOCATION USING A COMBINATION OF REMOVAL METHODS INCLUDING DIP NETS, SEINES AND/OR ELECTROFISHING SHALL BE CONDUCTED PRIOR TO START OF ANY STREAM BYPASS AND/OR CONSTRUCTION ACTIVITY
2. EQUIPMENT PUMPS USED FOR STREAM BYPASS PUMPING SHALL BE FITTED WITH FISH EXCLUSION SCREENS PURSUANT TO RCW 77.57.010 AND RCW 77.57.070 IN ACCORDANCE WITH THE FOLLOWING REQUIREMENTS:
   - 2.1. THE PUMP INTAKE MUST BE SCREENED BY ONE OF THE FOLLOWING:
     - 2.1.1. PERFORATED PLATE: 0.094 inch (MAX. OPENING DIAM.)
     - 2.1.2. PROFILE BAR: 0.069 inch (MAX. WIDTH OPENING)
     - 2.1.3. WOVEN WIRE: 0.087 inch (MAX. OPENING IN THE NARROW DIRECTION)
   - 2.2. THE OPEN AREA FOR ALL TYPES OF FISH GUARDS SHALL BE MAINTAINED AT A MINIMUM OF 27%.
   - 2.3. THE SCREENED FACILITY SHALL HAVE ENOUGH SURFACE AREA TO ENSURE THAT THE VELOCITY THROUGH THE SCREEN IS LESS THAN 0.4 FEET PER SECOND AT ALL TIMES.
   - 2.4. THE PUMP SCREEN SHALL BE IN PLACE WHENEVER WATER IS WITHDRAWN FROM THE STREAM THROUGH THE PUMP INTAKE AND MAINTAINED TO PREVENT INJURY OR ENTRAPMENT TO JUVENILE FISH.
3. EXTRA SUPPLIES SHALL BE KEPT ON HAND TO MAINTAIN CONSTANT WORKING ORDER OF THE BYPASS SYTEM.
4. A BACKUP PUMP SHALL BE ONSITE, OR READILY AVAILABLE IN THE EVENT OF PRIMARY PUMP FAILURE.

LEGEND

100	CONTOUR LINES (EX. ARE GRAYED)
	EX. DITCH FLOWLINE
	EX. STREAM THALWEG
	EX. ROAD EDGE OF GRAVEL
<BFC>	BANKFULL CHANNEL EXTENT
BP	BYPASS PUMP
DWP	CONSTRUCTION DEWATERING PUMP

02/22/16
KYLE FREEMAN
STATE OF WASHINGTON
46358
REGISTERED
PROFESSIONAL ENGINEER

0 20' 40'

REVISIONS	BY	DATE

CROSSING #12607

TESC & DIVERSION PLAN

WATERSHED BRIDGES
CITY OF HOQUIAM
609 8TH STREET
HOQUIAM, WA 98550

BERGLUND, SCHMIDT & ASSOC., INC.
Professional Engineers and Land Surveyors
2323 Bay Avenue
Hoquiam, WA. 98550
TEL.: (360)532-7630
FAX: (360)532-9682

JOB # :15.019
DATE:2/22/16
SCALE:SHOWN
DESIGNED:KJF
DRAWN:KJF
CHECKED:KJF

C-9

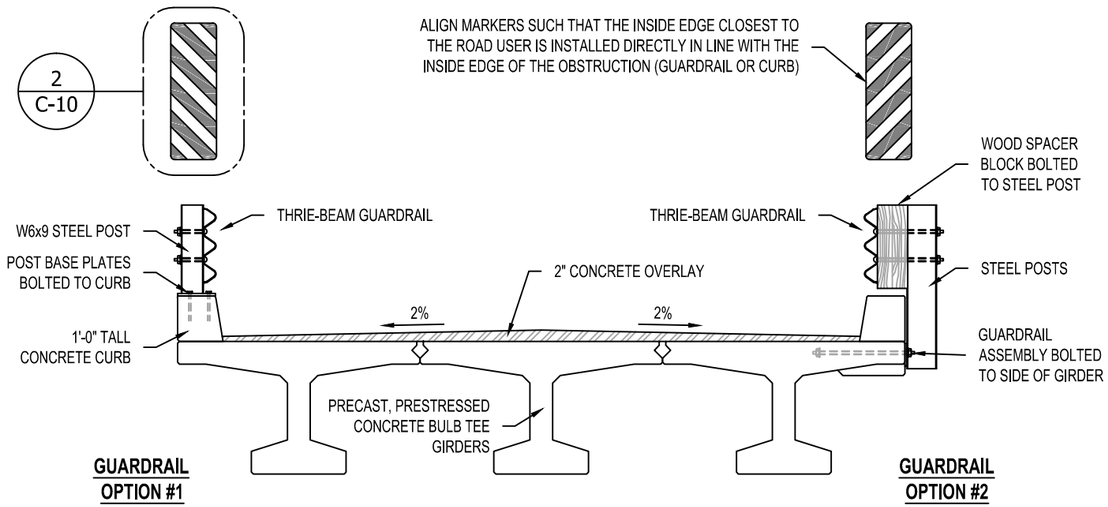

1 BRIDGE SECTION

SCALE: NTS

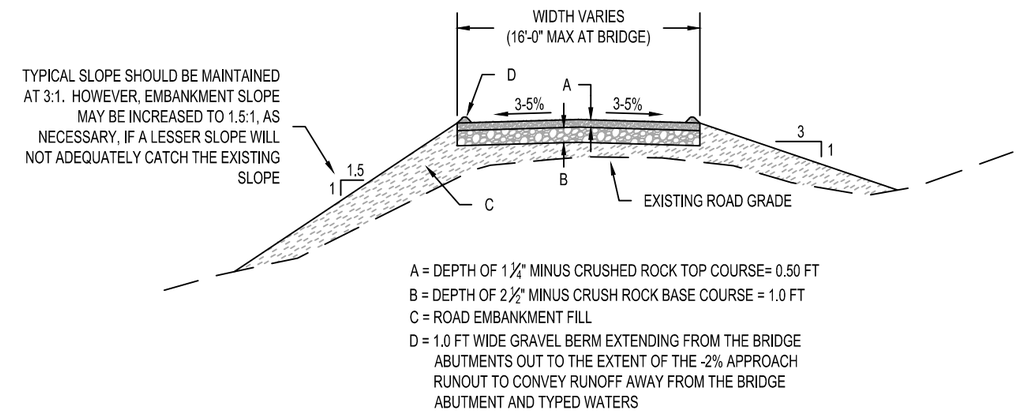

2 ROAD TRANSITION SECTION

SCALE: NTS

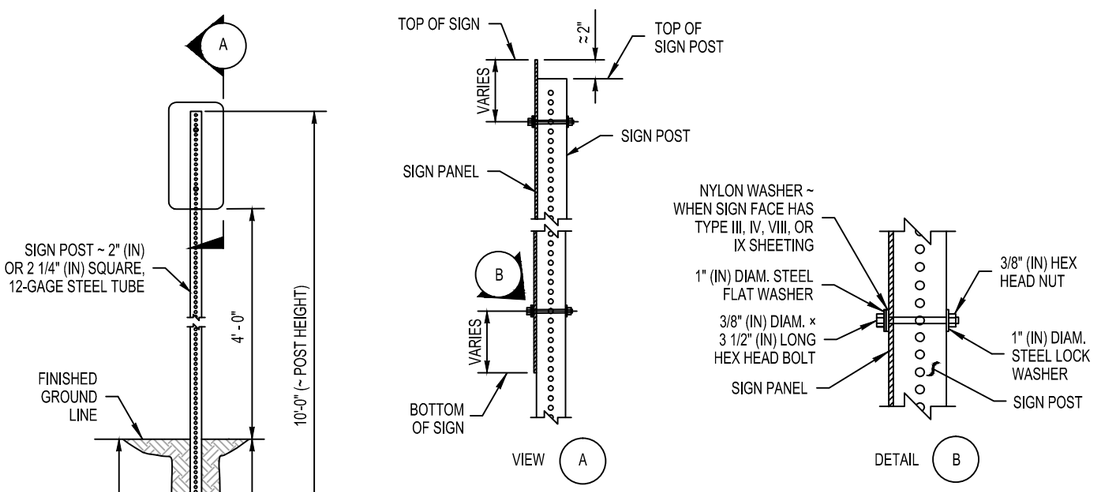

NOTES

1. SIGN POSTS OR SIGN POST ANCHORS MAY BE DRIVEN INTO THE NATIVE MATERIALS PROVIDED IT IS IN A NATURALLY OR MECHANICALLY COMPACTED STATE. DRIVING CAPS MUST BE USED FOR DRIVING INSTALLATIONS. OTHERWISE, DRILLED HOLES ARE TO BE USED AND SHALL BE OF SUFFICIENT DIMENSIONS TO ALLOW PLACEMENT AND THOROUGH COMPACTION OF BACKFILL MATERIAL AROUND THE POST.
2. PERFORATED SQUARE STEEL POST SHALL MEET THE REQUIREMENTS OF ASTM A 653 GRADE 50 AND FINISHED IN ACCORDANCE WITH ASTM A 653, G90, STRUCTURAL QUALITY 50 OR ASTM A 653, G140.
3. USE ONLY BASE CONNECTION MANUFACTURER SUPPLIED HARDWARE THAT MEETS THE REQUIREMENTS OF ASTM A 307, GRADE A & GALVANIZED.

3 STEEL SIGN SUPPORT

SCALE: NTS

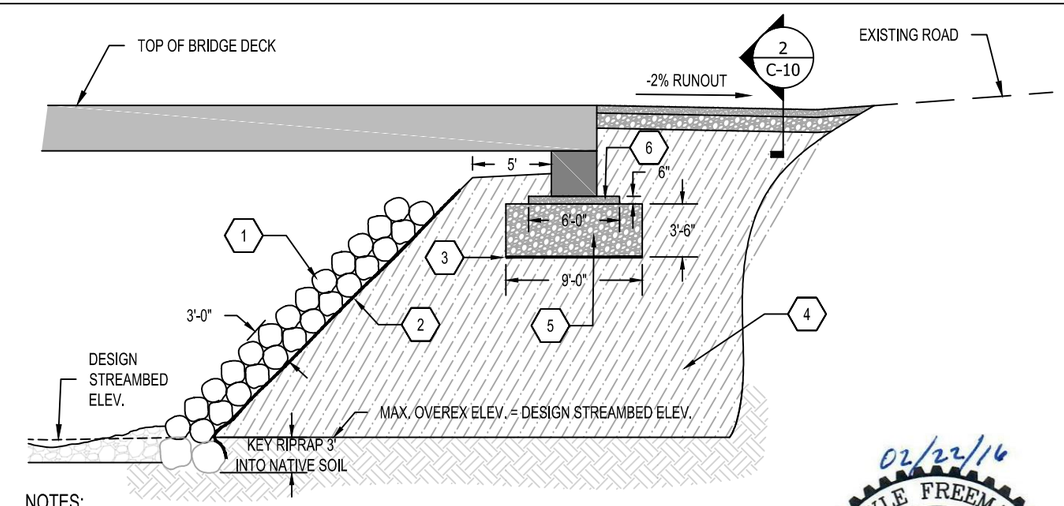

NOTES:

1. PLACE 3' THICK LAYER OF LIGHT, LOOSE RIPRAP ON SLOPE. CAP THE RIPRAP WITH QUARRY SPALLS TO FILL VOIDS AND CREATE A SMOOTHER SURFACE.
2. PLACE GEOTEXTILE FABRIC BENEATH THE RIPRAP. GEOTEXTILE SHALL MEET THE REQUIREMENTS FOR "SOIL SEPARATION" PER THE TECHNICAL SPECIFICATIONS.
3. PLACE "SOIL SEPARATION" GEOTEXTILE FABRIC BENEATH THE FOOTING BASE ROCK.
4. PLACE EMBANKMENT FILL IN 12" MAX. LIFTS UP TO THE TOP OF FOOTING ELEVATION AND 6" MAX. LIFTS UP TO ROAD SECTION BASE ELEVATION.
5. PLACE 2½" MINUS CRUSH ROCK BASE TO THE MIN. DIMENSIONS SHOWN. COMPACT IN 6" MAX. LIFTS.
6. PLACE 1¼" MINUS CRUSH ROCK TO THE MIN. DIMENSIONS SHOWN. COMPACT IN 6" MAX. LIFTS.
7. COMPACT ALL FILL MATERIALS TO 95% MAX. PROCTOR DENSITY.

02/22/16
KYLE FREEMAN
STATE OF WASHINGTON
46358
REGISTERED
PROFESSIONAL ENGINEER

4 EMBANKMENT & FOOTING BACKFILL

SCALE: NTS

REVISIONS	BY	DATE

DETAILS

WATERSHED BRIDGES
CITY OF HOQUIAM
609 8TH STREET
HOQUIAM, WA 98550

BERGLUND, SCHMIDT & ASSOC., INC.
Professional Engineers and Land Surveyors
2323 Bay Avenue
Hoquiam, WA. 98550
TEL.: (360)532-7630
FAX: (360)532-9682

JOB # :15.019
DATE:2/22/16
SCALE:NONE
DESIGNED:KJF
DRAWN:KJF
CHECKED:KJF

C-10

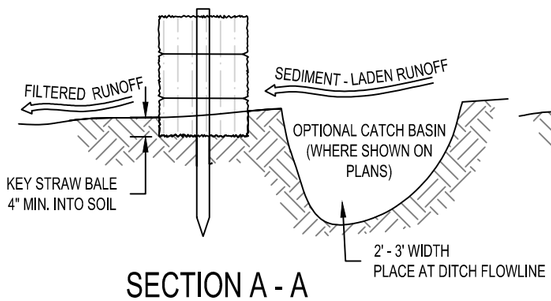

SECTION A - A

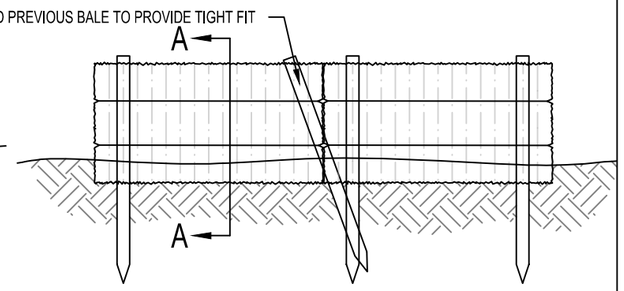

SECTION B - B

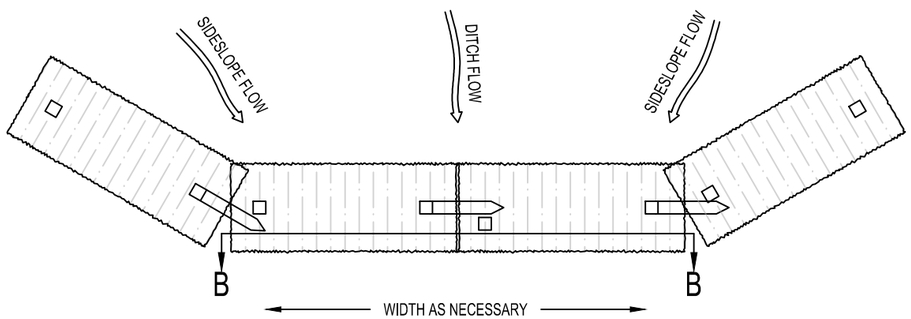

STRAW BALE BARRIER PLAN

EROSION CONTROL GENERAL NOTES:

1. EROSION CONTROL MEASURES ARE NOT LIMITED TO THE ITEMS ON THESE PLANS. THE CONTRACTOR IS RESPONSIBLE FOR THE INSTALLATION, MAINTENANCE AND IMPROVEMENT OF ALL EROSION CONTROL MEASURES AS NEEDED FOR THE FULL DURATION OF THE PROJECT UNTIL FINAL ACCEPTANCE OF THE OWNER. CARE SHALL BE TAKEN TO PREVENT MIGRATION OF SEDIMENT TO ADJACENT STREAM.
2. THE CONTRACTOR SHALL MAINTAIN ALL EROSION CONTROL MEASURES IN ACCORDANCE WITH DEPARTMENT OF NATURAL RESOURCES FOREST PRACTICE MANUAL AND DEPARTMENT OF ECOLOGY WESTERN WASHINGTON STORMWATER MANAGEMENT MANUAL.
3. STOCKPILED MATERIAL ONSITE SHALL BE COVERED AT ALL TIMES WHEN THE STOCKPILE IS NOT IN ACTIVE USE.
4. WASTE SOIL (SPOIL) DEPOSIT AREAS ARE TO BE LOCATED WHERE MATERIAL WILL NOT ENTER ANY TYPED WATERS IF EROSION OR FAILURE OCCURS.
5. STABILIZE ALL DISTURBED SOILS THAT HAVE A POTENTIAL TO DELIVER SEDIMENT TO TYPED WATERS. STABILIZATION METHODS INCLUDE ESTABLISHING VEGETATION AND COVERING EXPOSED SOILS WITH BIO-MATTING, STRAW. SLASH OR HYDRO-MULCHING.
6. SEED MIX SHALL BE NON-INVASIVE, NATIVE SPECIES APPROVED BY DNR FOR THE PROJECT LOCATION.
7. TEMPORARILY STABILIZE DISTURBED SOILS WITH STRAW OR SLASH UNTIL TIME THAT SEEDING WILL GERMINATE WITHOUT THE NEED OF ADDITIONAL SITE VISITS TO APPLY WATER.
8. KEEP SOIL DISTURBING ACTIVITIES TO THE MINIMUM REQUIRED TO COMPLETE THE PROJECT AND AVOID UNNECESSARY REMOVAL OF VEGETATION IN ALL FUNCTIONING DITCHES.
9. AFTER COMPLETION OF WORK, BUT BEFORE REMOVING THE TEMPORARY EROSION CONTROL MEASURES, REMOVE SEDIMENT ACCUMULATED FROM BEHIND THE EROSION CONTROL MEASURES AND DEPOSIT IT IN A LOCATION WHERE IT WILL NOT ENTER TYPED WATER.

3 *EROSION CONTROL DETAIL & NOTES*

SCALE: NTS

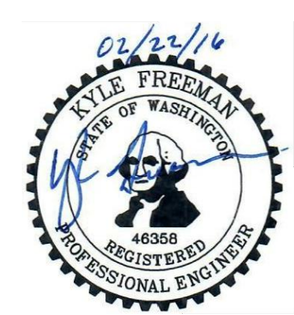

REVISIONS	BY	DATE

DETAILS

WATERSHED BRIDGES
CITY OF HOQUIAM
609 8TH STREET
HOQUIAM, WA 98550

BERGLUND, SCHMIDT & ASSOC., INC.
Professional Engineers and Land Surveyors
2323 Bay Avenue
Hoquiam, WA. 98550
TEL.: (360)532-7630
FAX: (360)532-9682

JOB # :15.019
DATE:2/22/16
SCALE:NONE
DESIGNED:KJF
DRAWN:KJF
CHECKED:KJF

C-11